Electrolux

PARTS 2001	9C
	P0101008

ILLUSTRATED PARTS LIST

MODEL Flymo Multitrim 250D
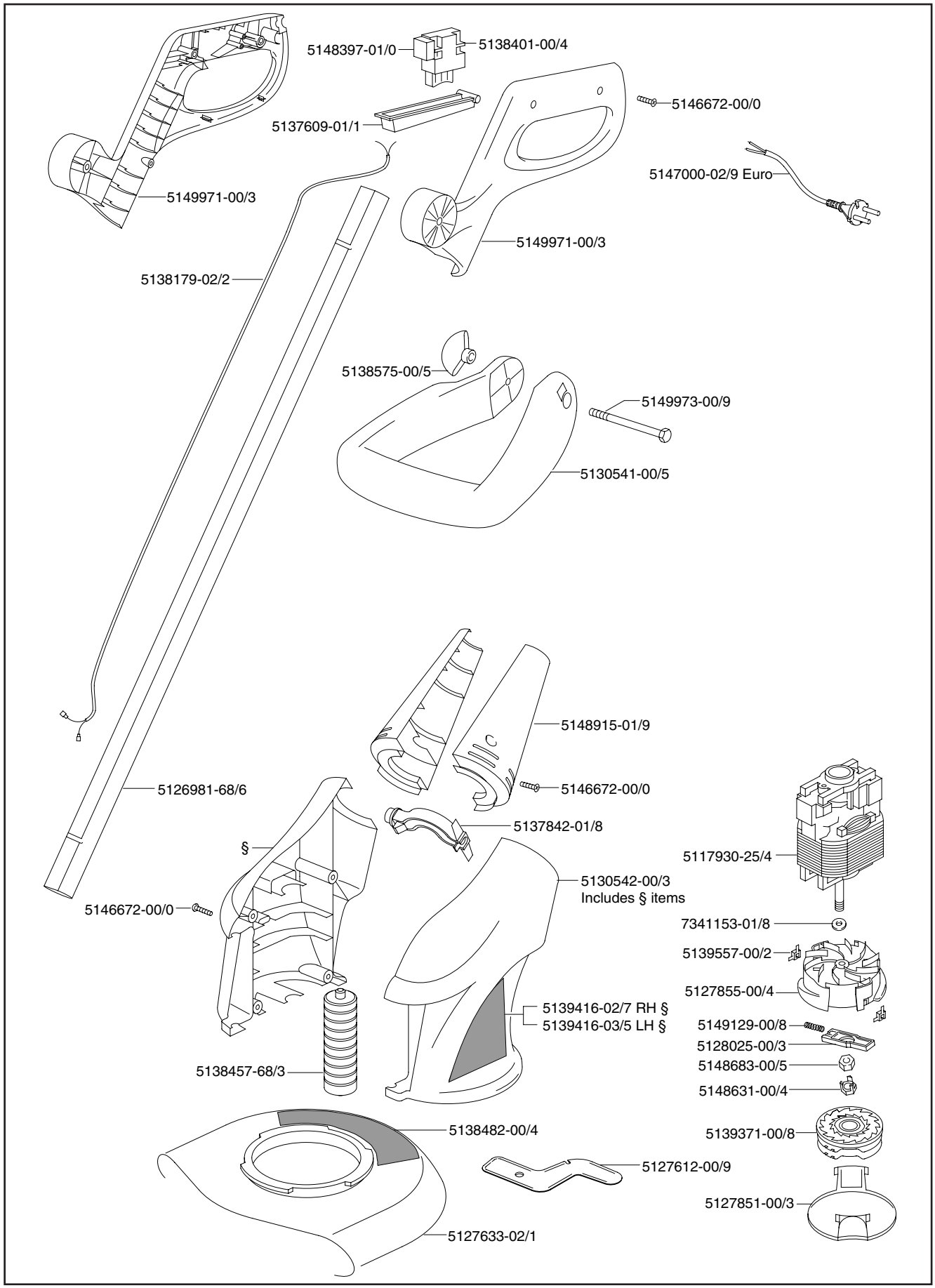
9648550-14
NL