Electrolux

ELECTROLUX OUTDOOR PRODUCTS

PARTS 2000	9C
	P999015

MODEL	Multitrim 250 DX

ILLUSTRATED PARTS LIST
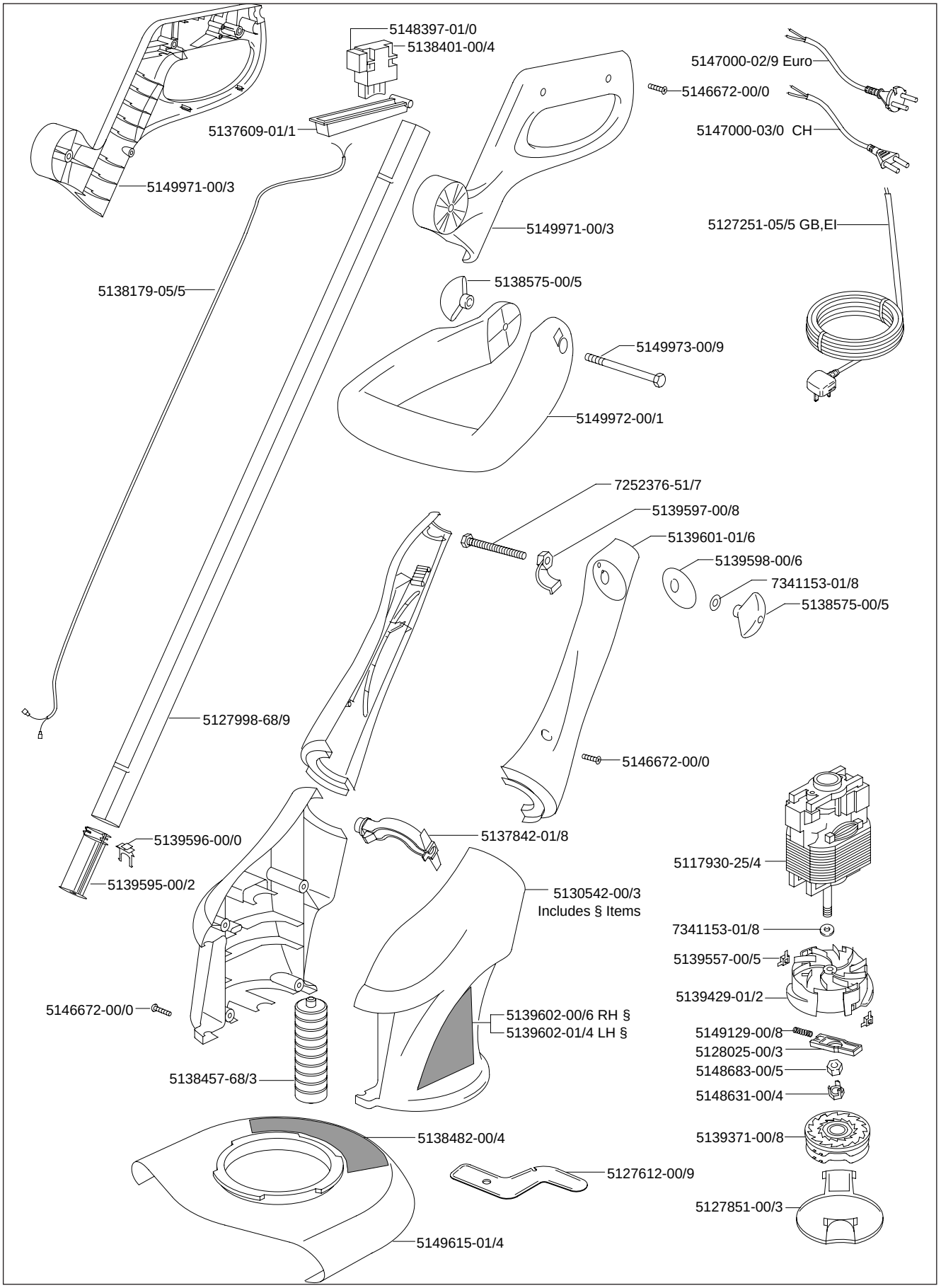
9648562-25	9648562-22	9648562-67	9648562-86
GB, EI	CH	E.Euro	Euro